Surname	Centre Number	Candidate Number
First name(s)		0

GCSE – CONTINGENCY

3420UD0-1

Z22-3420UD0-1

THURSDAY, 23 JUNE 2022 – AFTERNOON

PHYSICS – Unit 2:
Forces, Space and Radioactivity

HIGHER TIER

1 hour 45 minutes

For Examiner's use only		
Question	**Maximum Mark**	**Mark Awarded**
1.	**10**	
2.	**10**	
3.	**11**	
4.	**11**	
5.	**9**	
6.	**6**	
7.	**10**	
8.	**13**	
Total	**80**	

3420UD01
01

ADDITIONAL MATERIALS

In addition to this paper you will require a calculator and a ruler.

INSTRUCTIONS TO CANDIDATES

Use black ink or black ball-point pen. Do not use gel pen or correction fluid. You may use a pencil for graphs and diagrams only.

Write your name, centre number and candidate number in the spaces at the top of this page.

Answer **all** questions.

Write your answers in the spaces provided in this booklet. If you run out of space use the additional page(s) at the back of the booklet, taking care to number the question(s) correctly.

INFORMATION FOR CANDIDATES

The number of marks is given in brackets at the end of each question or part-question.

The assessment of the quality of extended response (QER) will take place in question **7(c)**.

JUN223420UD0101

© WJEC CBAC Ltd.

Equations

speed = $\frac{\text{distance}}{\text{time}}$	
acceleration [or deceleration] = $\frac{\text{change in velocity}}{\text{time}}$	$a = \frac{\Delta v}{t}$
acceleration = gradient of a velocity-time graph	
distance travelled = area under a velocity-time graph	
resultant force = mass × acceleration	$F = ma$
weight = mass × gravitational field strength	$W = mg$
work = force × distance	$W = Fd$
kinetic energy = $\frac{\text{mass} \times \text{velocity}^2}{2}$	$\text{KE} = \frac{1}{2}mv^2$
change in potential energy = mass × gravitational field strength × change in height	$\text{PE} = mgh$
force = spring constant × extension	$F = kx$
work done in stretching = area under a force-extension graph	$W = \frac{1}{2}Fx$
momentum = mass × velocity	$p = mv$
force = $\frac{\text{change in momentum}}{\text{time}}$	$F = \frac{\Delta p}{t}$
u = initial velocity v = final velocity t = time a = acceleration x = displacement	$v = u + at$ $x = \frac{u + v}{2}t$ $x = ut + \frac{1}{2}at^2$ $v^2 = u^2 + 2ax$
moment = force × distance	$M = Fd$

SI multipliers

Prefix	Multiplier
p	1×10^{-12}
n	1×10^{-9}
μ	1×10^{-6}
m	1×10^{-3}

Prefix	Multiplier
k	1×10^{3}
M	1×10^{6}
G	1×10^{9}
T	1×10^{12}

© WJEC CBAC Ltd.

Examiner only

Answer **all** questions.

1. A white snooker ball, rolling to the right, collided with a **stationary** red snooker ball at a time of 2.5 ms.
Each snooker ball has a mass 0.16 kg.

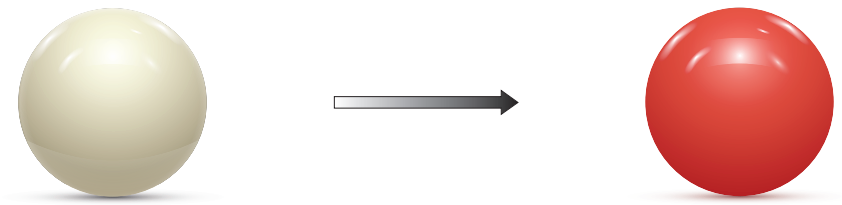

The graph below shows the momentum of the **white snooker ball** before and after the collision.

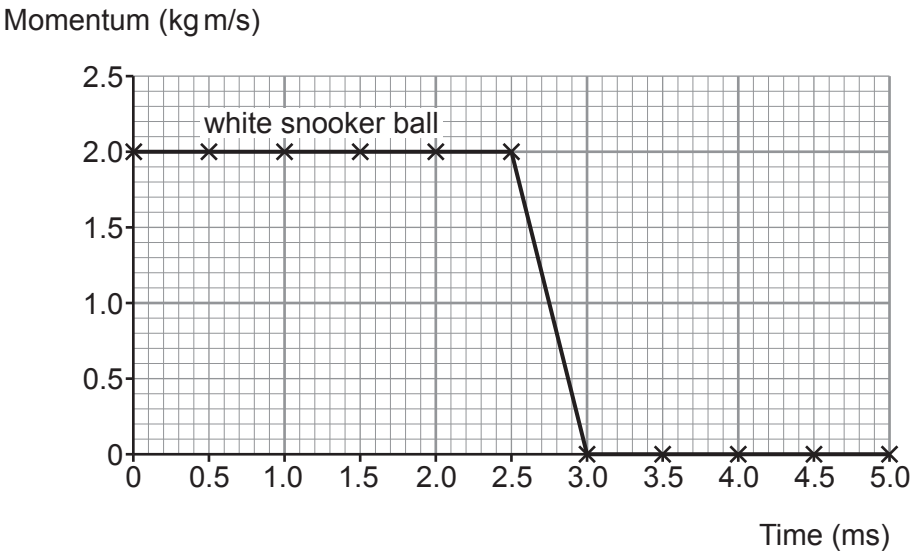

(a) Use information from the graph to answer the following questions.

(i) State the initial momentum of the white snooker ball. [1]

initial momentum = ... kg m/s

3420UD01 03

© WJEC CBAC Ltd.

Examiner only

(ii) Use the equation:

$$\text{initial velocity} = \frac{\text{initial momentum}}{\text{mass}}$$

to calculate the initial velocity of the white snooker ball. [2]

initial velocity = ... m/s

(iii) The collision takes a time of 0.5 ms. State this time in seconds. [1]

time = ... s

(iv) Use the equation:

$$\text{resultant force} = \frac{\text{change in momentum}}{\text{time}}$$

to calculate the resultant force on the white snooker ball during the collision. [2]

resultant force = ... N

(b) (i) Underline the correct word or phrase from each of the brackets below which correctly completes the sentence. [2]

The law of conservation of momentum states that the total momentum before a collision is **(less than / equal to / greater than)** the total momentum after a collision provided **(no / small / large)** external forces act.

© WJEC CBAC Ltd.

Examiner only

(ii) The momentum of the red snooker ball, between 0.0 and 2.5 ms, has been added to the original graph. It is shown as a red dotted line.
Complete the graph below to show the momentum of the red snooker ball from 2.5 ms to 5.0 ms. [2]

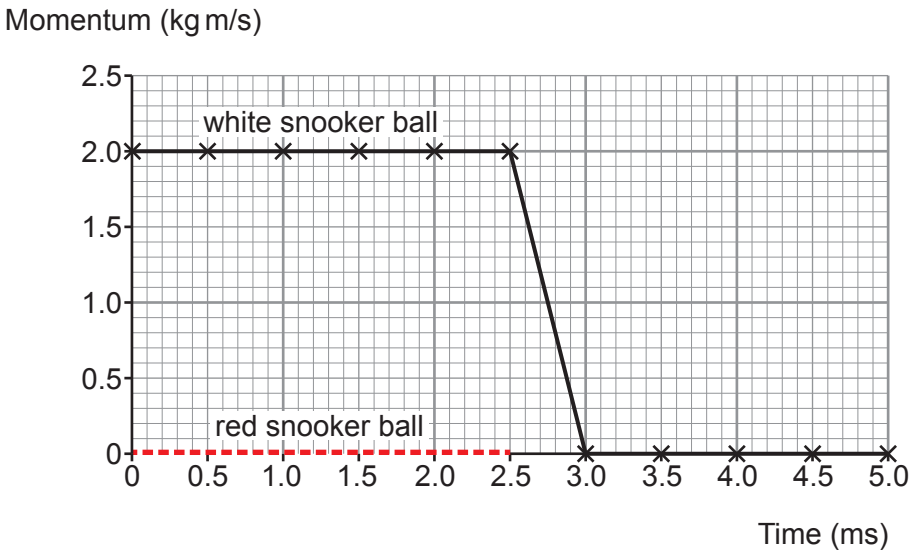

10

3420UD01 05

© WJEC CBAC Ltd.

Examiner only

2. A group of students investigate how the surface area of a falling paper cake case affects its terminal speed.

- Cake case 1 has a mass of 0.5 g and a surface area of 100 cm^2.
- Cake case 1 is dropped from a height of 1.80 m but only timed over the final 1.50 m of the fall.

The students' results are shown in the table below.

Drop time (s)			Mean drop time (s)	Drop distance (m)
Attempt 1	Attempt 2	Attempt 3		
0.96	0.92	0.94	.....	1.50

(a) (i) The students decide there are no anomalies. Explain why. [1]

.....

(ii) **Complete the table** to show the mean drop time. [1]
Space for calculation.

(b) The experiment is repeated with cake case 2.
It has the same shape and the same mass as cake case 1.
However, cake case 2 has a surface area of 50 cm^2.
The students correctly calculate the terminal speed for both cake cases.

Cake case 1		
Mass (g)	Surface area (cm^2)	Terminal speed (m/s)
0.5	100	1.6

Cake case 2		
Mass (g)	Surface area (cm^2)	Terminal speed (m/s)
0.5	50	2.3

© WJEC CBAC Ltd.

Examiner only

(i) A cake case reaches terminal speed when its weight is balanced by air resistance. **Tick (✓)** the **three** correct statements. [3]

Cake case 2 has the same terminal speed as cake case 1. ☐

Cake cases 1 and 2 have identical weight. ☐

At terminal speed, cake case 1 experiences a greater value of air resistance than cake case 2. ☐

At terminal speed, both cake cases experience identical values of air resistance. ☐

At terminal speed, cake case 1 experiences a smaller value of air resistance than cake case 2. ☐

At terminal speed, both cake cases have zero acceleration. ☐

(ii) Before the experiment was carried out the students made the following prediction:

"If the surface area of the cake case is halved its terminal speed will double."

Use data from the tables on the previous page to explain whether their prediction was correct. [2]

.....

.....

.....

.....

3420UD01 07

© WJEC CBAC Ltd.

Examiner only

(c) A skydiver sits at the doorway of a helicopter for 15 s before jumping. His speed is recorded and displayed on the graph below.

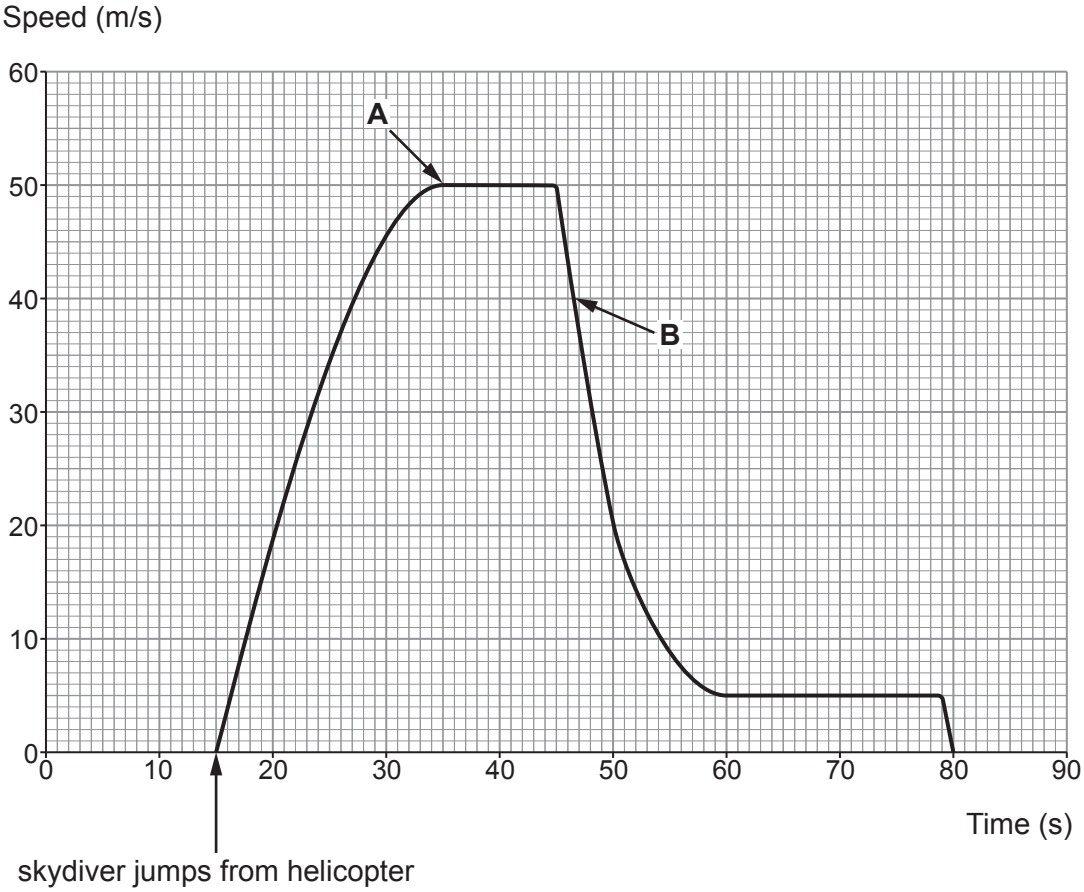

Tick (✓) the **three** correct statements. [3]

- The skydiver lands on the ground 80s after jumping from the helicopter. ☐
- The terminal speed after the parachute is opened is $\frac{1}{10}$th of the terminal speed before the parachute is opened. ☐
- The skydiver's weight is greatest at the point labelled **B** on the graph. ☐
- The parachute is opened 30 s after the skydiver leaves the helicopter. ☐
- At point **B** the weight of the skydiver is greater than the air resistance. ☐
- At point **A** the skydiver stops accelerating. ☐

10

© WJEC CBAC Ltd.

BLANK PAGE

PLEASE DO NOT WRITE ON THIS PAGE

© WJEC CBAC Ltd.

Examiner only

3. Mary investigated moments using a **100 cm** ruler and two different weights.

The apparatus used is shown below.

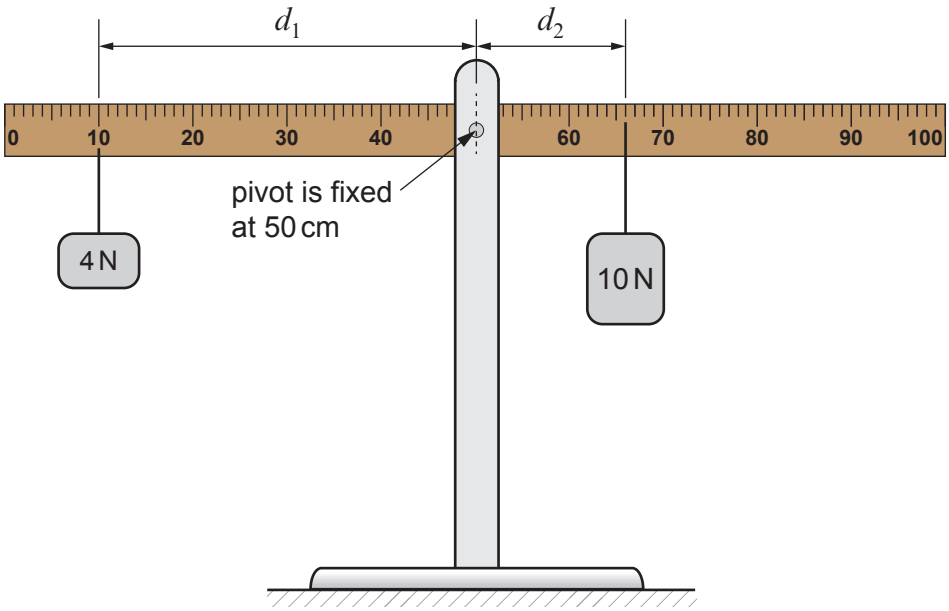

Mary checked the ruler was horizontal. She then attached weights to the ruler.
The 4 N weight, W_1, was attached to the ruler a distance, d_1, from the pivot.
The 10 N weight, W_2, was then attached to the ruler to make it horizontal again.
The distance, d_2, of the 10 N weight from the pivot was noted.

Mary's results are shown in the table.

Weight, W_1 (N)	Distance, d_1 (cm)	Weight, W_2 (N)	Distance, d_2 (cm)
4	40	10	16
4	35	10	14
4	20	10	8
4	15	10	6
4	5	10	2

(a) Mary states the resolution of the ruler she used in this experiment as 1 cm.
Use information from the diagram to explain whether Mary is correct. [1]

.....

© WJEC CBAC Ltd.

Examiner only

(b) (i) Plot the data on the grid below and draw a suitable **straight** line. [3]

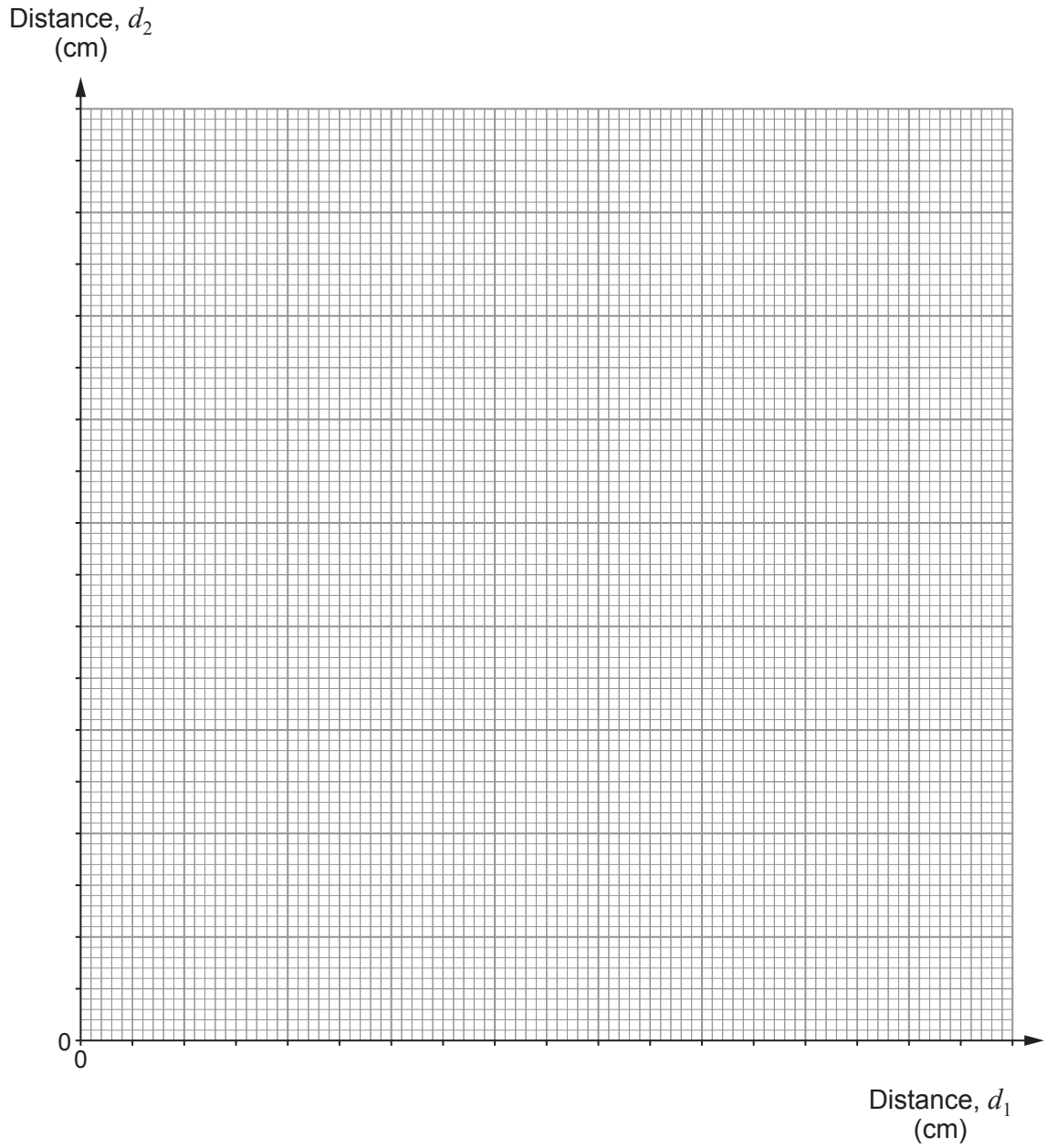

3420UD01
11

© WJEC CBAC Ltd.

Examiner only

(ii) Mary suggests that the value of the gradient of the graph is the same as $\frac{W_1}{W_2}$.

Use data from the graph and the table to explain whether Mary is correct. [3]

.....

.....

(c) (i) Mary now places the 10 N weight at a distance, d_2, of 32 cm from the pivot.
Use an equation from page 2 to calculate its clockwise moment about the pivot. [2]

Clockwise moment = ... N cm

(ii) Explain, using moments, why the ruler cannot now be balanced using the 4 N weight. [2]

.....

.....

.....

11

© WJEC CBAC Ltd.

Examiner only

4. A fitness app is used by a cyclist to monitor his cycling performance.

(a) The distance cycled each week is displayed as a chart.
The data for two months, April and June, are shown below.

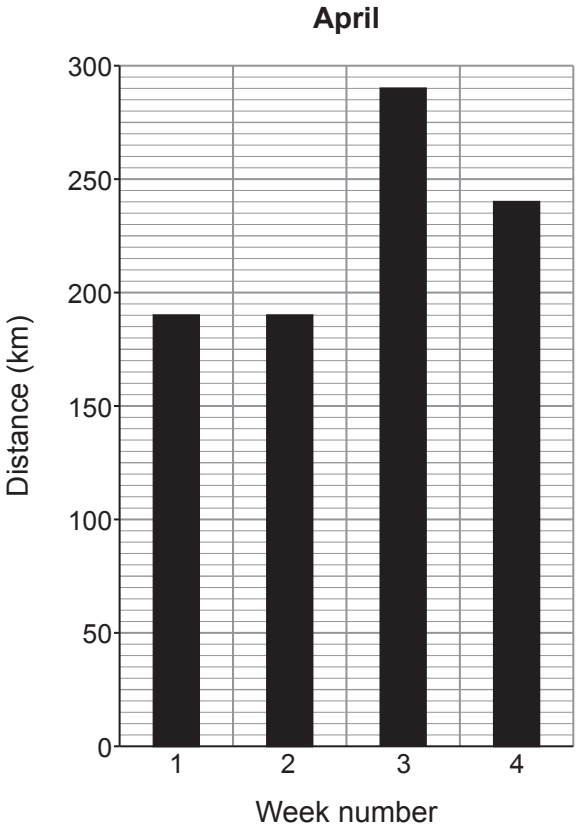

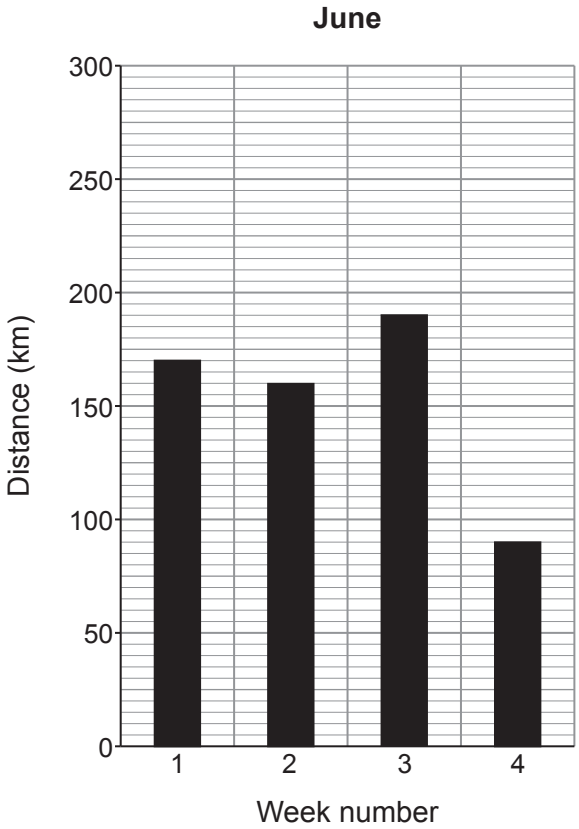

(i) The total distance travelled by the cyclist in June was 610 km.
Show that the total distance travelled by the cyclist in April was 910 km. [1]

3420UD01
13

© WJEC CBAC Ltd.

Examiner only

(ii) The cyclist cycled for a total time of 31.5 hours during April and 19.25 hours during June.
A student suggests that the mean speed of the cyclist is greater in June than in April.
Use an equation from page 2 to determine whether the student is correct. [3]
Space for calculations.

.....

.....

(b) (i) A track cyclist has an initial velocity of 8.0 m/s.
She uniformly accelerates towards the finish line, travelling a distance of 42 m, in a time of 3.0 s. [4]

Use the equation:

$$x = ut + \frac{1}{2}at^2$$

to calculate the cyclist's acceleration and state its unit.

acceleration = ...

unit = ...

(ii) The resultant force that causes the acceleration towards the finish line is 284 N.

I. Use an equation from page 2 to calculate the mass of the bike and the cyclist. [2]

mass of bike and cyclist = ... kg

© WJEC CBAC Ltd.

Examiner only

II. The mass of the cyclist is 64.5 kg. Calculate the mass of the bike. [1]

mass of bike = ... kg

11

© WJEC CBAC Ltd.

Examiner only

5. The HR diagram below shows the evolutionary path of our Sun.

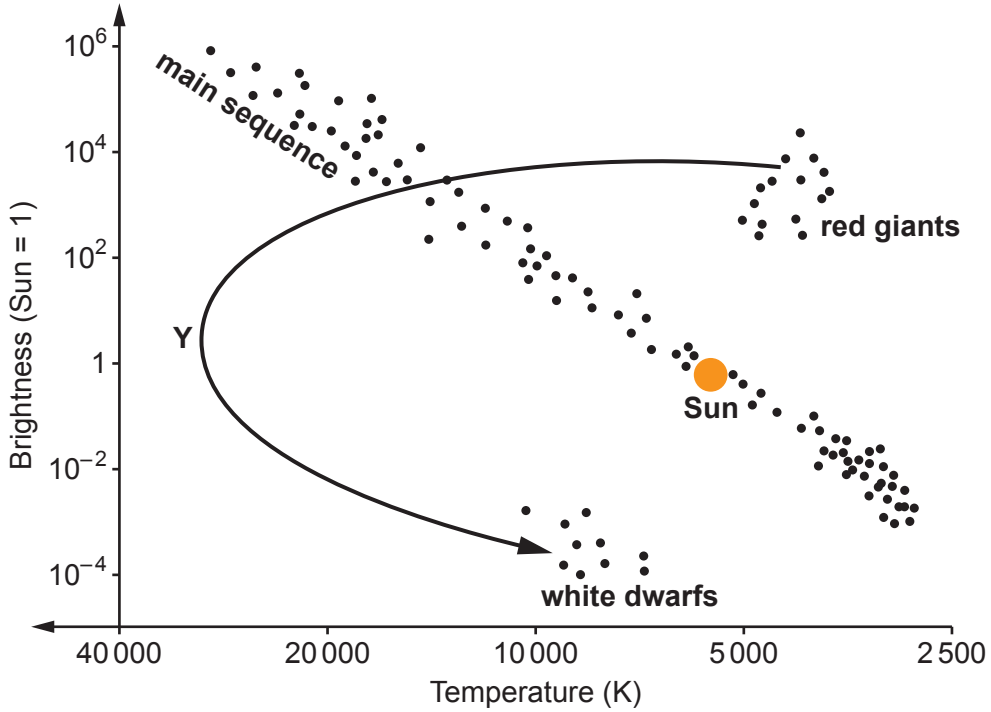

(a) Currently the Sun is part of the main sequence but when it evolves into a red giant, its temperature decreases and its brightness increases.

(i) The arrow shows the path the Sun will take as it evolves from a red giant to a white dwarf.
Use information from the HR diagram, to describe how the **temperature** of the Sun changes along this path.
Use the point **Y** in your answer to help with your description. [2]

.....

.....

.....

(ii) Use information from the HR diagram, to describe how the **brightness** of the Sun changes when it evolves from a red giant into a white dwarf. [1]

.....

© WJEC CBAC Ltd.

Examiner only

(b) The life cycle of a high mass star is different from that of the Sun. Starting with the main sequence, state, in order, the remaining stages in its life cycle. [3]

.....

.....

.....

(c) An information table obtained from the internet shows some distances used in astronomy.

Distance	Equivalent
1 light year (l-y)	63 241 astronomical units (AU)
1 astronomical unit (AU)	1.5×10^8 km

Sirius B is a white dwarf. It is **8.6 light years** away from Earth.
Use information from the table to calculate the distance between Earth and Sirius B.
Give your answer **in metres**. [3]

distance = ... m

9

© WJEC CBAC Ltd.

Examiner only

6. The following equation shows a fusion reaction that happens in stars.

$$^{1}_{1}\mathrm{H} + ^{2}_{1}\mathrm{H} \longrightarrow ^{3}_{2}\mathrm{He} + \text{energy}$$

(a) State the **two** conditions needed for a fusion reaction to take place in a star. [2]

1. .....

2. .....

(b) An incomplete absorption spectrum from the Sun is shown below.

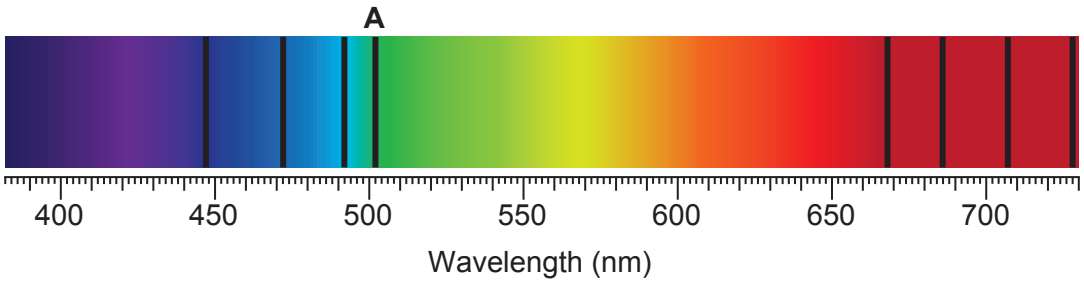

(i) An absorption line at wavelength **590 × 10^{-9} m** is missing from the spectrum. **Complete the diagram** above by adding the missing absorption line. [1]

(ii) Describe **and** explain how the position of the absorption line labelled **A** would be different for a star in a more distant galaxy. [3]

.....

.....

.....

.....

.....

6

© WJEC CBAC Ltd.

BLANK PAGE

PLEASE DO NOT WRITE ON THIS PAGE

© WJEC CBAC Ltd.

Examiner only

7. In a fast breeder nuclear reactor, uranium-238 ($^{238}_{92}U$) is converted into the fissionable isotope plutonium-239 ($^{239}_{94}Pu$). The reactor has control rods but no moderator.

The sequence, of the 3 stages, is shown.

1st stage $^{238}_{92}U + ^{1}_{0}n \longrightarrow ^{239}_{92}U$

2nd stage $^{239}_{92}U \longrightarrow ^{239}_{93}Np + ^{0}_{-1}e$

3rd stage $^{239}_{93}Np \longrightarrow ^{239}_{94}Pu + ^{0}_{-1}e$

(a) State the total number of beta particles emitted during the 3 stages. ..... [1]

(b) When a plutonium-239 nucleus is bombarded with a **high-speed neutron** it splits into barium (Ba), strontium (Sr) and two high-speed neutrons.
The reaction is shown below.

$$^{239}_{94}Pu + ^{1}_{0}n \longrightarrow ^{145}_{56}Ba + ^{93}_{38}Sr + 2\,^{1}_{0}n$$

The two high-speed neutrons split more plutonium-239 nuclei and cause a nuclear fission chain reaction.
The fast breeder nuclear reactor does not require a moderator, but a conventional nuclear reactor does.

(i) Explain the purpose of the moderator that is used in a conventional nuclear reactor. [2]

.....

.....

.....

(ii) Suggest why the fast breeder nuclear reactor doesn't require a moderator. [1]

.....

.....

© WJEC CBAC Ltd.

Examiner only

(c) High level radioactive waste (HLW) from nuclear power stations and nuclear medicine may be contained in solid glass (vitrified) and then kept securely in stainless steel lined, concrete containers in deep underground facilities. HLW is highly ionising and has a long half-life.
Discuss the advantages **and** disadvantages of storing HLW in this way. [6 QER]

.....

.....

.....

.....

.....

.....

.....

.....

.....

.....

.....

.....

.....

.....

.....

.....

.....

10

© WJEC CBAC Ltd.

8. A school science technician bought a spring for an experiment.
The data leaflet about the spring is shown below.

Data leaflet

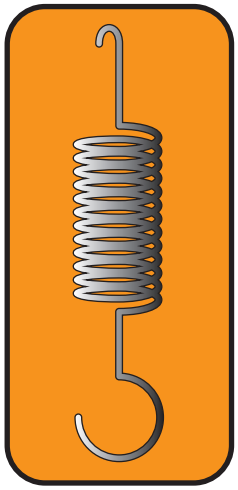

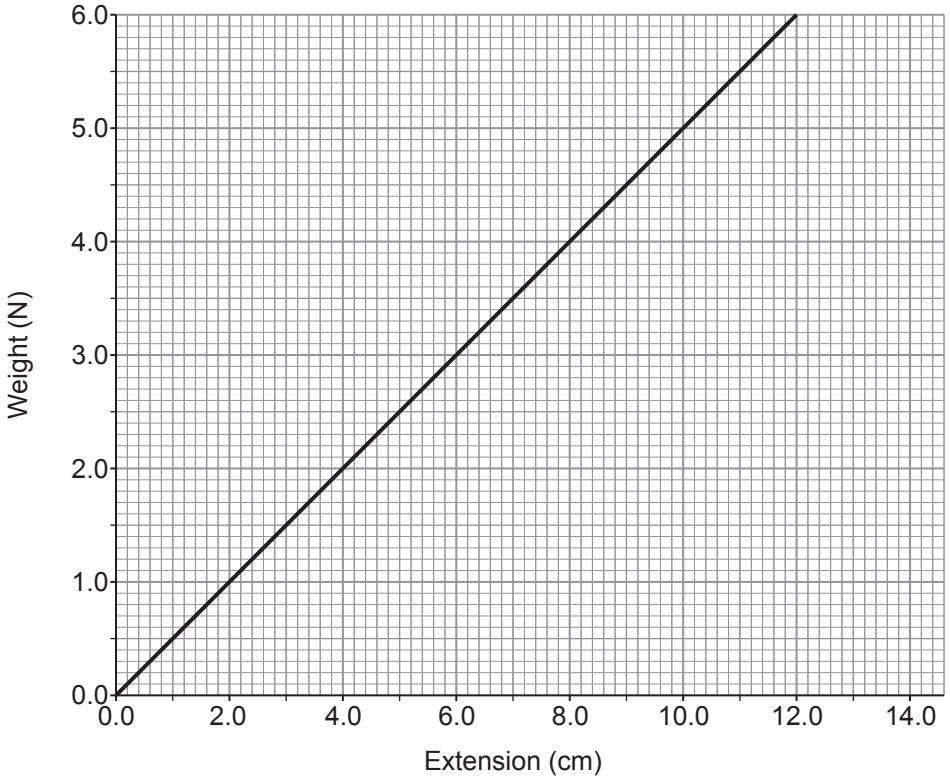

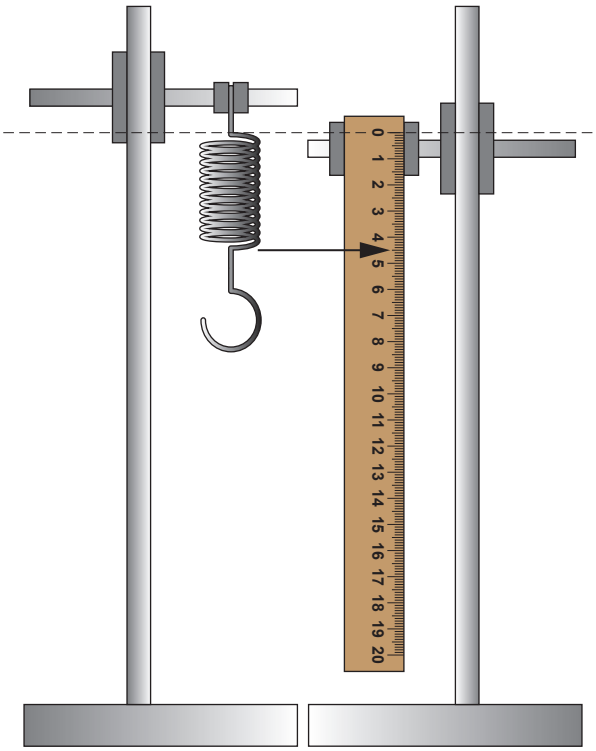

Picture 1

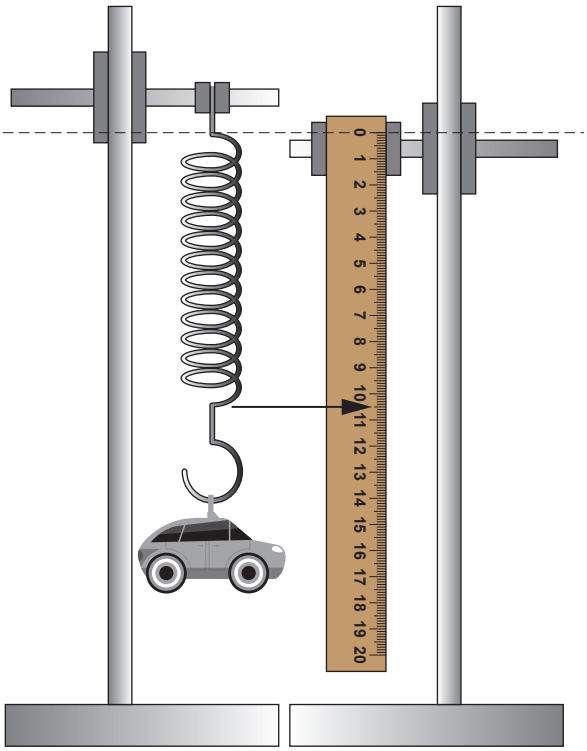

Picture 2

© WJEC CBAC Ltd.

Examiner only

(a) A student used the spring to determine the mass of a toy.

Two pictures of the experiment were taken by the student.
Picture 1 shows the unstretched spring and Picture 2 shows the spring with the toy attached.

(i) Use information from the two pictures to determine the spring's extension with the toy attached. [1]

spring's extension = ... cm

(ii) Use information from the leaflet, and an equation from page 2, to calculate the mass of the toy. (g = 10 N/kg) [3]

mass of toy = ... kg

(b) (i) State Newton's 3rd law. [2]

.....

.....

(ii) The diagram below shows the spring suspended from a metal rod.
A weight of 4 N is attached to the spring.

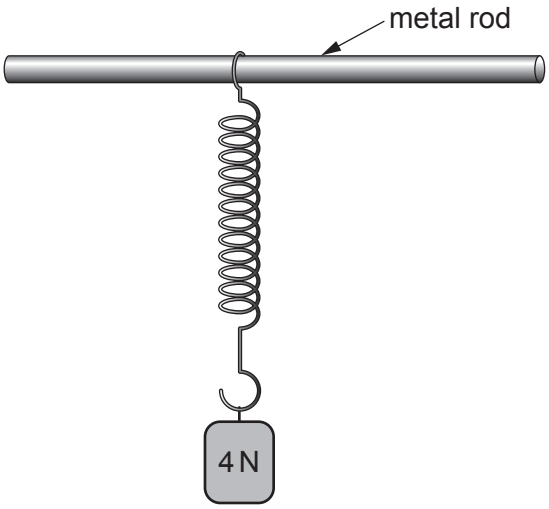

State the **size and direction** of the force that the spring applies to the weight. [2]

size = ... N direction = ...

© WJEC CBAC Ltd.

Examiner only

(c) The picture shows a woman using a piece of gym equipment containing a **different** spring.

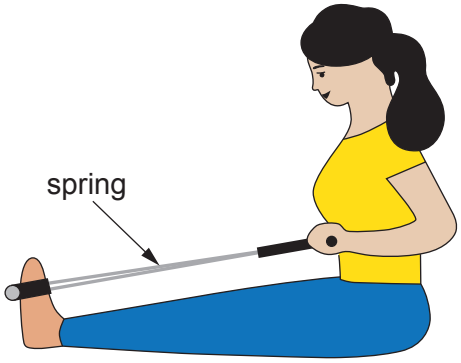

Use the equation:

$$W = \frac{1}{2}Fx$$

to answer the following questions.

(i) Initially the spring is unstretched.
The woman applies a force of 35 N and the spring extends 0.32 m.
Calculate the work done by the woman stretching the spring. [2]

work done = ... J

(ii) A gym instructor suggests to the woman, if she applies **double** the force to the spring she will double the amount of work done.
Assuming the spring obeys Hooke's law (applied force is directly proportional to extension) determine whether the gym instructor is correct. [3]
Space for calculation.

.....

.....

.....

.....

END OF PAPER

13

© WJEC CBAC Ltd.

Question number	Additional page, if required. Write the question number(s) in the left-hand margin.

Examiner only

© WJEC CBAC Ltd.

Question number	Additional page, if required. Write the question number(s) in the left-hand margin.	Examiner only

© WJEC CBAC Ltd.

BLANK PAGE

PLEASE DO NOT WRITE ON THIS PAGE

© WJEC CBAC Ltd.

BLANK PAGE

PLEASE DO NOT WRITE ON THIS PAGE

© WJEC CBAC Ltd.